Current part is item (13) on diagram. Available at www.oshkoshequipment.com

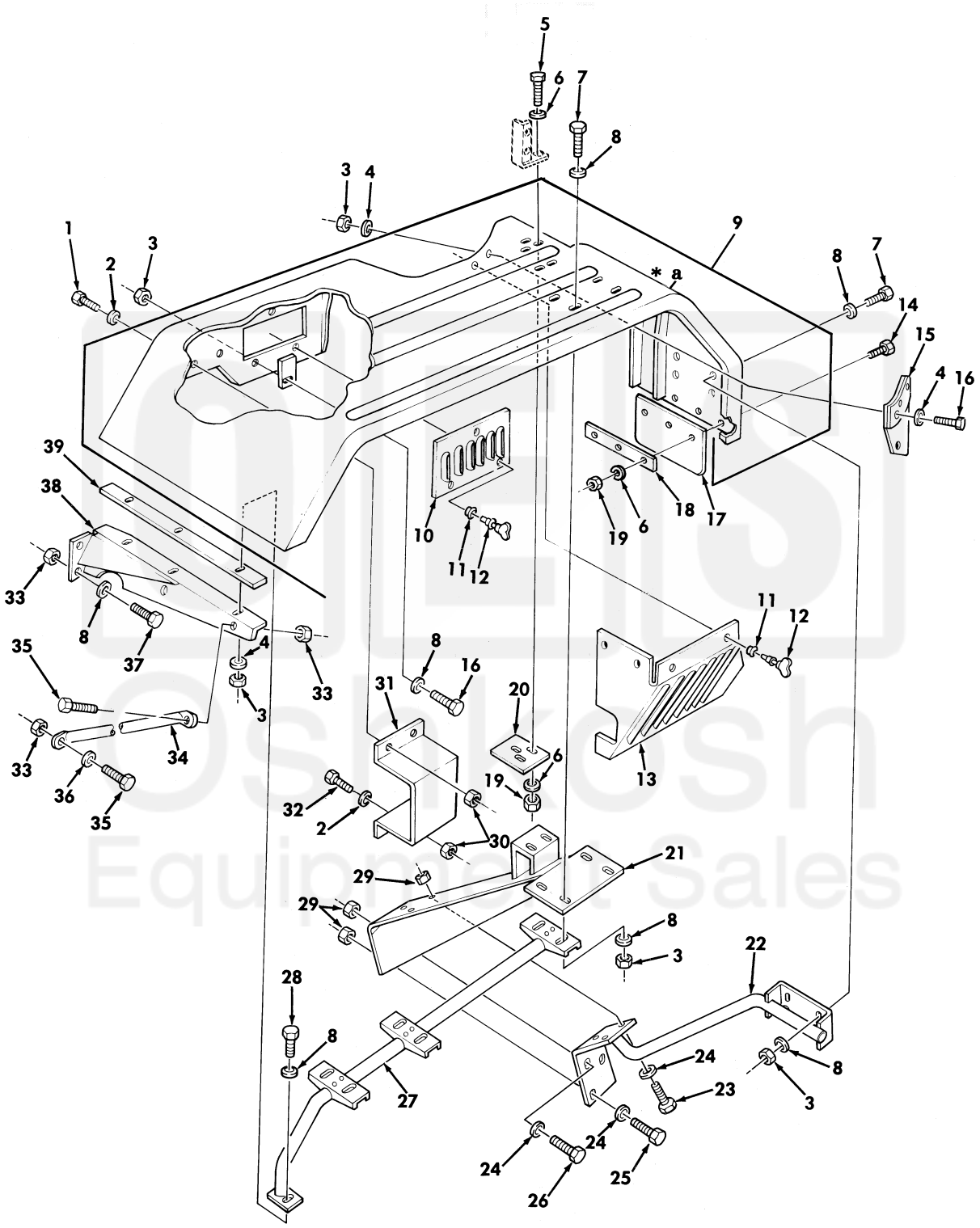

*** a PART OF ITEM 9**

Figure 258. Fender Assembly, Support, and Mounting Hardware, Left Side.

Current part is item (13) on diagram. Available at www.oshkoshequipment.com

Current part is item (13) on diagram. Available at www.oshkoshequipment.com

GROUP 1802 FENDERS,RUNNING BOARDS WITH MOUNTING AND ATTACHING PARTS, WINDSHIELD GLASS

FIG. 258 FENDER ASSEMBLY,SUPPORT, AND MOUNTING HARDWARE,LEFT SIDE

(1) ITEM NO	(2) SMR CODE	(3) NSN	(4) CAGEC	(5) PART NUMBER	(6) DESCRIPTION AND USABLE ON CODE (UOC)	(7) QTY
1	PAOZZ	5306-00-050-1238	96906	MS90727-32	BOLT,MACHINE.....	2
2	PAOZZ	5310-00-081-4219	96906	MS27183-12	WASHER,FLAT.....	3
3	PAOZZ	5310-00-982-4908	96906	MS21045-6	NUT,SELF-LOCKING,HE.....	17
4	PAOZZ	5310-00-080-6004	96906	MS27183-14	WASHER,FLAT.....	6
5	PAOZZ	5305-00-068-0515	80204	B1821BH025F100N	SCREW,CAP,HEXAGON H.....	3
6	PAOZZ	5310-00-809-4058	96906	MS27183-10	WASHER,FLAT.....	6
7	PAOZZ	5305-00-269-2804	96906	MS90726-61	SCREW,CAP,HEXAGON H.....	10
8	PAOZZ	5310-00-809-4061	96906	MS27183-15	WASHER,FLAT.....	27
9	PAOZZ	2510-00-134-4643	19207	11664314	FENDER,VEHICULAR.....	1
10	PAOZZ	5342-01-075-2625	19207	10938414	.PLATE,LOUVER LEFT SIDE.....	1
11	PAOZZ	5325-00-449-2797	19207	7601760	.EYELET,TURNLOCK FAS.....	5
12	PAOZZ	5325-00-290-8240	19207	8743897	.STUD ASSEMBLY,TURNL LEFT.....	5
12	PAOZZ	5325-00-290-8240	19207	8743897	.STUD ASSEMBLY,TURNL RIGHT.....	3
13	PAOZZ	2540-01-159-5858	19207	11664252	.VENTILATOR,AIR CIRC.....	1
14	PAOZZ	5305-00-267-8953	80204	B1821BH025F063N	SCREW,CAP,HEXAGON H.....	3
15	XBFZZ		19207	11664268	PLATE.....	1
16	PAOZZ	5305-00-269-2803	96906	MS90726-60	SCREW,CAP,HEXAGON H.....	4
17	PAOZZ	2510-01-098-1911	19207	11648728	SHIELD.....	1
18	PAOZZ	2510-01-097-0149	19207	10938343	PLATE.....	1
19	PAOZZ	5310-00-061-7325	96906	MS21045-4	NUT,SLFLKG HEXAGON.....	3
20	PAOZZ	5340-00-178-0443	19207	11677583	PLATE,MENDING.....	1
21	PAOZZ	2510-00-408-4694	19207	11648537	SUPPORT,FENDER.....	1
22	PAOZZ	2510-00-117-0263	19207	11648624	BRACE,FENDER.....	1
23	PAOZZ	5305-00-725-0154	96906	MS90727-112	SCREW,CAP,HEXAGON H.....	3
24	PAOZZ	5310-00-209-0295	96906	MS20002-8	WASHER,FLAT.....	3
25	PAOZZ	5305-00-719-5239	96906	MS90727-116	SCREW,CAP,HEXAGON H.....	2
26	PAOZZ	5305-00-719-5238	80204	B1821BH050F200N	SCREW,CAP,HEXAGON H.....	1
27	PAOZZ	2510-01-160-7914	19207	11648520	BRACE,FENDER.....	1
28	PAOZZ	5305-00-269-3240	80204	B1821BH038F150N	SCREW,CAP,HEXAGON H.....	3
29	PAOZZ	5310-00-488-3888	96906	MS51943-40	NUT,SELF-LOCKING,HE.....	6
30	PAOZZ	5310-00-982-4912	96906	MS21045-5	NUT,SELF-LOCKING,HE.....	3
31	PAOZZ	2540-00-408-4682	19207	11664652	SHIELD,STONE.....	1
32	PAOZZ	5306-00-225-9089	96906	MS90726-34	BOLT,MACHINE.....	1
33	PAOZZ	5310-00-062-4954	96906	MS21045-8	NUT,SELF-LOCKING,HE.....	5
34	PAOZZ	2510-00-114-4635	19207	11648773	BRACKET,FENDER,VEHI.....	1
35	PAOZZ	5305-00-719-5221	80204	B1821BH050F150N	SCREW,CAP,HEXAGON H..... UOC:624,626,627,629,630,631,632,635,638	2
35	PAOZZ	5305-00-719-5238	80204	B1821BH050F200N	SCREW,CAP,HEXAGON H..... UOC:614,620,621,622,623,625,628,633,634, 637	2
36	PAOZZ	5310-00-809-5997	96906	MS27183-17	WASHER,FLAT.....	1
37	PAOZZ	5305-00-716-8184	96906	MS90726-112	SCREW,CAP,HEXAGON H.....	1
38	PAOZZ	2510-00-408-4693	19207	11664377	SUPPORT,FENDER.....	1
39	PAOZZ	2590-00-425-0587	19207	11593312	ANTISQUEAK,FENDER B.....	1

END OF FIGURE

Current part is item (13) on diagram. Available at www.oshkoshequipment.com